| Rating | 3A 125V,1.5A 250V AC | Mount Hole | Circuit Structure |
|---|---|---|---|
| Contact R | 50m ohm Max. | 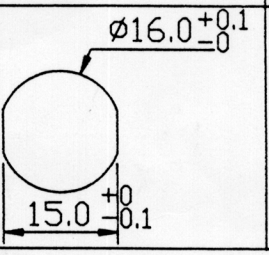 | 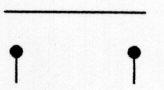 |
| Insulation R | DC 500V 100M ohm Min. | | |
| Dielectric Strength | AC 1500V 1 minute | | |
| Circuit | 2P SPST OFF-ON | | |



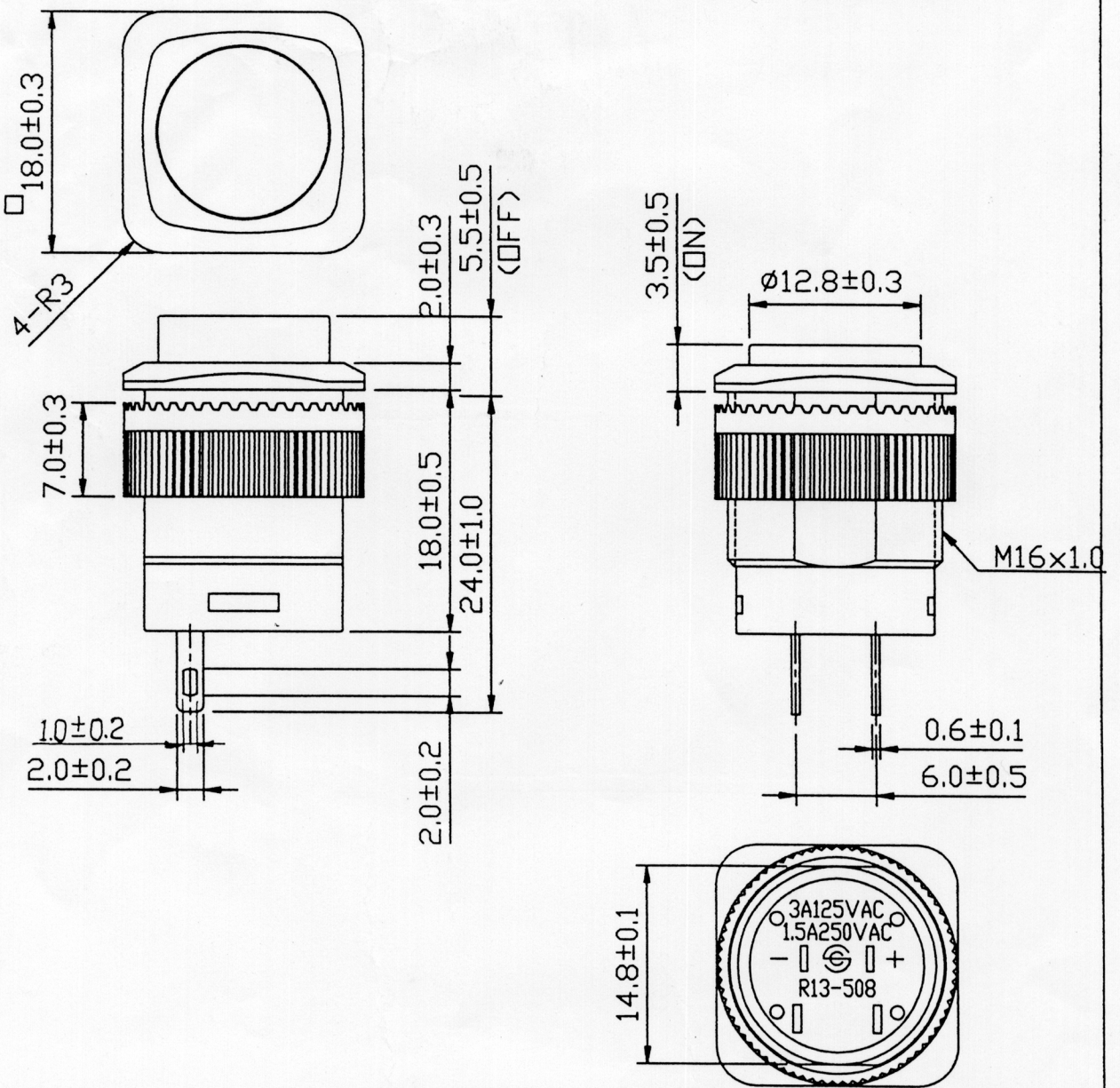


| Spec-No. | R13-508B | | | No. | Note | Date | Name |
|---|---|---|---|---|---|---|---|
| Date | | | | | | | |
| Drawing | Check | Approval | | | | | |
| 王伯山 | | 工程部 85.11.26 辛宗煌 | | | | | |
| NOV-26-96 | | | | | | | |

## R13-508

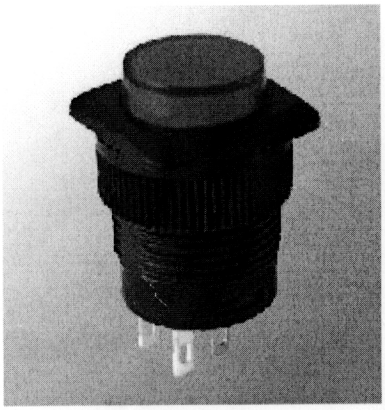

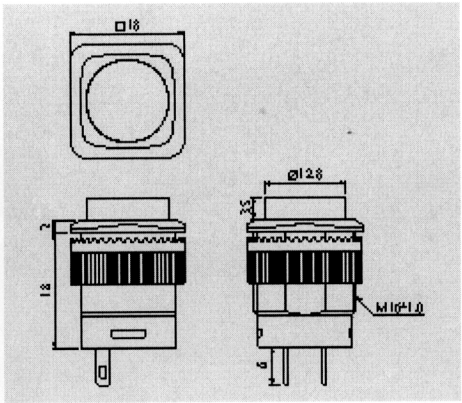


Rating

3A 125V AC
1.5A 250V AC

Contact resistance
50m£[ Max

Insulation resistance
DC 500V 100M£[ Min

Dielectric strength
AC 1500V 1 minute

Cut-out

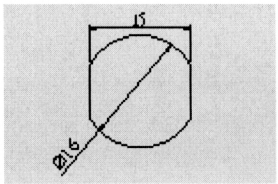


7 mm max

### FEATURES

- MATERIAL: Frames are nylon with glass fiber (UL flame: 94HB). Terminals are silver plated brass.
- Illuminated actuator are molded in PC, available with red, amber, and green colors.

R13-508 ■■-■■
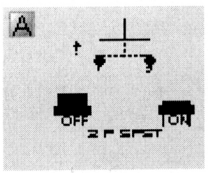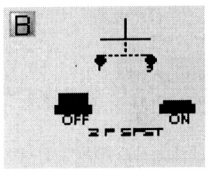
| FUNCTION | BUTTON | TERMINAL |
|---|---|---|
| A | W/O LED | 05 SO |
| B | L With LED (3VDC) | |